KÖNIG & MEYER
Stands For Music

214/6 Speaker Stand

- load capacity: 50 kg*
- professional, solid, transportable
- similarly adapted for home, property, public area
- Height: min. 1395 mm / max. 2170 mm; foot circle: 1320 mm; extension ø 35 mm; weight: 4,4 kg

Thank you for choosing this product. This instruction manual informs you about the important steps to set up and handle the product. We recommend to keep the manual in a place for a possible later use.

SAFETY INSTRUCTIONS

- Load capacity: max. 50 kg*
- Before and after use check stand for damage.
  Damaged Stands may not be used.
- before use:
  - check the functional capability of: K&M-stand, speakers and tools concerning: completeness, integrity, usability
  - choose only trained installers (2 persons with professional and physical qualification)
- optimal stability conditions:
  - use only on even and stable surface
  - avoid off-center loading
  - set up brace **4** in horizontal position
- safety in operation:
  - unauthorized persons should keep distance to protect from stumble and tilting
  - inspect bolted assemblies regularly
  - always insert the safety pin after positioning of the speaker
  - do not push and pull the loaded stand on the floor; it can cause damages on the base
- safety in maintaining and removing
- first remove load
- pay attention to possible hazards (squeezing, hurting) by collapsing

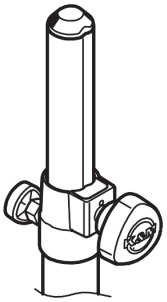

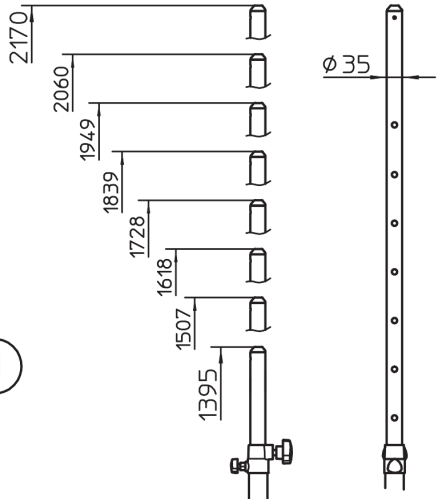

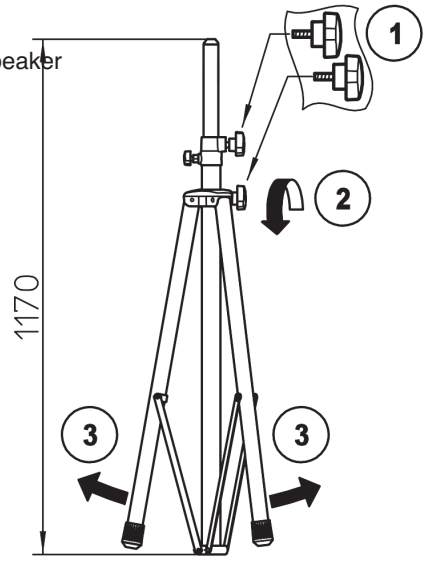

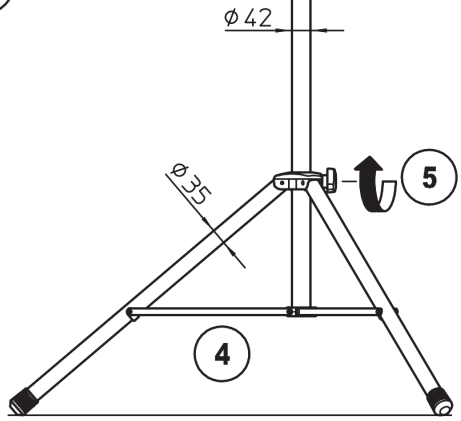

MOUNTING INSTRUCTIONS

The mounting of the 214/6 is easy to handle
1 screw-in both locking knobs
2 loosen the locking knob on the base clamp
3 spread legs apart to max. base width
4 braces should come into a horizontal position
5 tighten locking knob **2**
NOTE:
Do not over tighten the locking knobs.
This will result in undue stress to the fitting.
Just enough to hold the extensions position firmly.

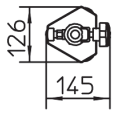

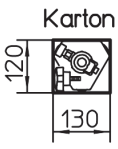

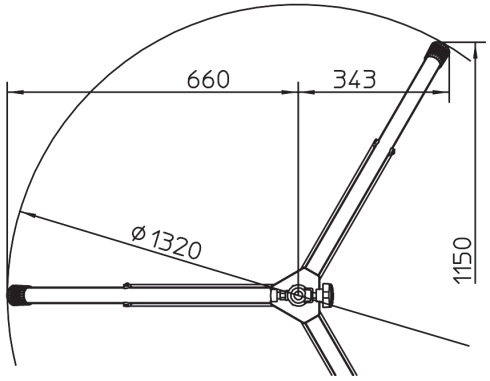

SPECIFICATIONS

Material	baserods: Alu extension, braces, locking pin: steel clamps: zinc die-cast foot rubbers: (TPE)
Load capacity	max. 50 kg*
Dimensions	foot circle: diameter 1320 mm height: 1395 - 2170 mm (by max.foot circle) extension: diameter 35 mm
Collapsed, kg	1170 x 145 x 126 mm, 4,4 kg
Card box, kg	1185 x 130 x 120 mm, 5,2 kg
Accessories (optional)	bag 21311 (for one or two 21460) K&M-flange adaptor (e.g. 19580, 19656) K&M-screw-on-adaptor 24281 K&M-sleeve adaptor 21326 (ø 38 mm)

* With centric loading, on a horizontal surface and without lateral forces (wind, shocks etc.)

KÖNIG & MEYER GmbH & Co. KG
Kiesweg 2, 97877 Wertheim, www.k-m.de
21460-009-55/76/81 Rev.14/12/12 03-79-709-00 3/20

KÖNIG & MEYER
Stands For Music

USER INFORMATION / FUNCTIONS

WHEN MOUNTING SPEAKERS and STRADDLING STAND

- NOTE!

Do not undervalue the weight of the load.

- Attaching and moving of the load should be done by trained installers
- While moving the load hold the extension in a safe and firm way.
- Secure the extension with the locking pin.
- NEW: the extension ends in a cone.
  This would be helpful to attach the load.

MAINTENANCE

- Handle the stand with care.
- Maintain only in unloaded mode.
- For cleaning use a damp cloth and a non-abrasive cleaner.

(D) DEBUGGING & (R) REPAIR

D: stand totters:
R: Arrange an even ground.
R: Spread legs into max. width and tighten the locking knob

D: Extension totters and/or is running in:
R: Make sure that the locking pin is in work and tighten locking knobs.

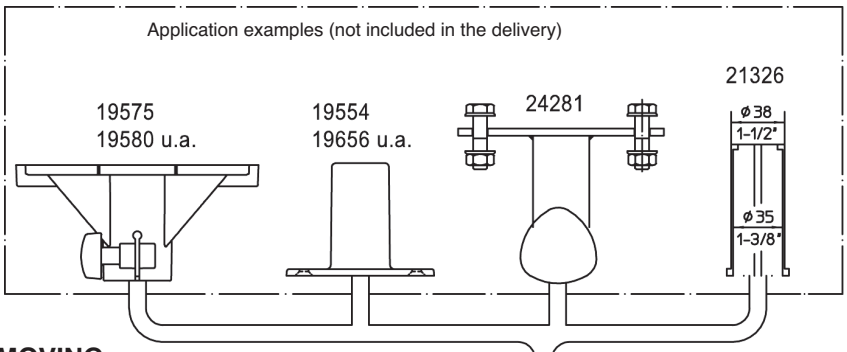

MOVING

Involved Persons:
FI - First Installer:
holds the loaded extension

SI - Second Installer:
handles locking knob and locking pin

Action:

FI
1 holds the extension firmly

SI
2 loosens the locking knob
3 pulls the head of the locking pin until the extension is able to move

FI
4 lifts the extension in desired height
NOTE: for easier finding of the pin hole this hole should be seen for a moment above the clamp

SI
5 unhands the head of the locking pin so it´s able to atch into the hole of the extension

FI
6 lowers the extension slowly until the locking pin is latching into the hole

SI
7 tightens the locking knob
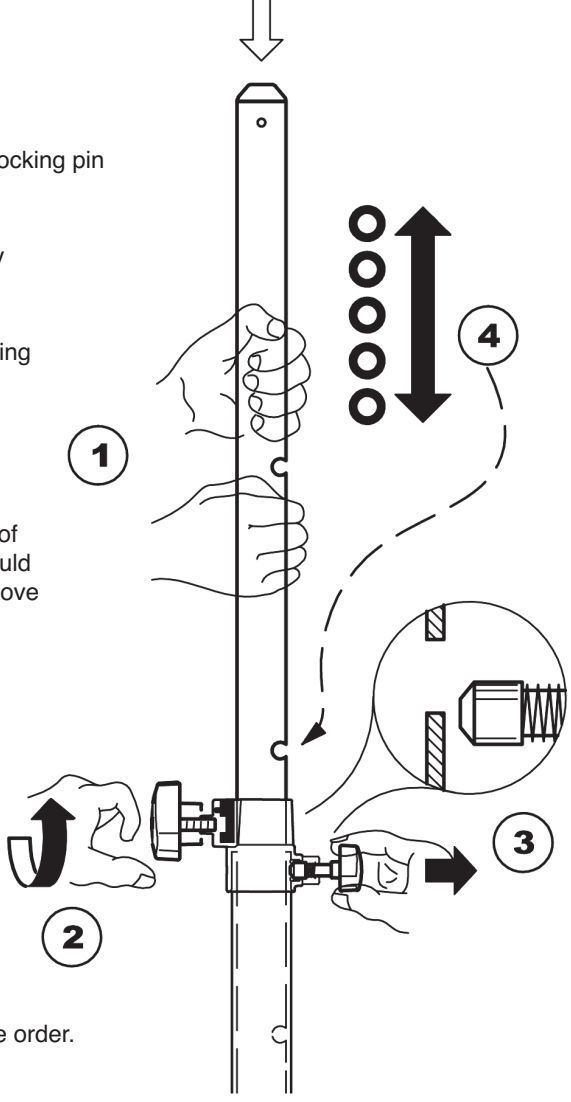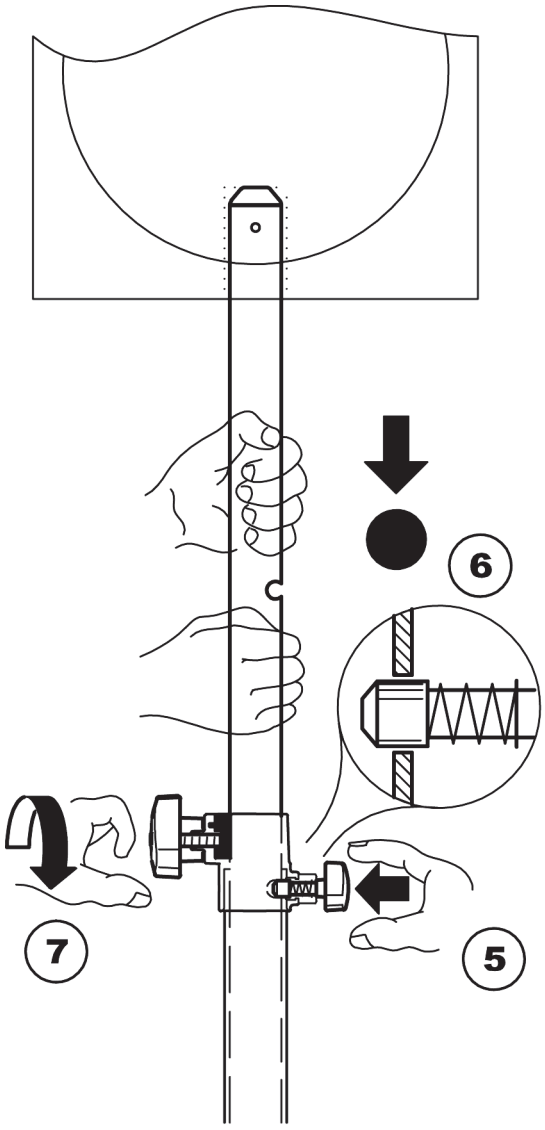
Remove the load in reverse order.